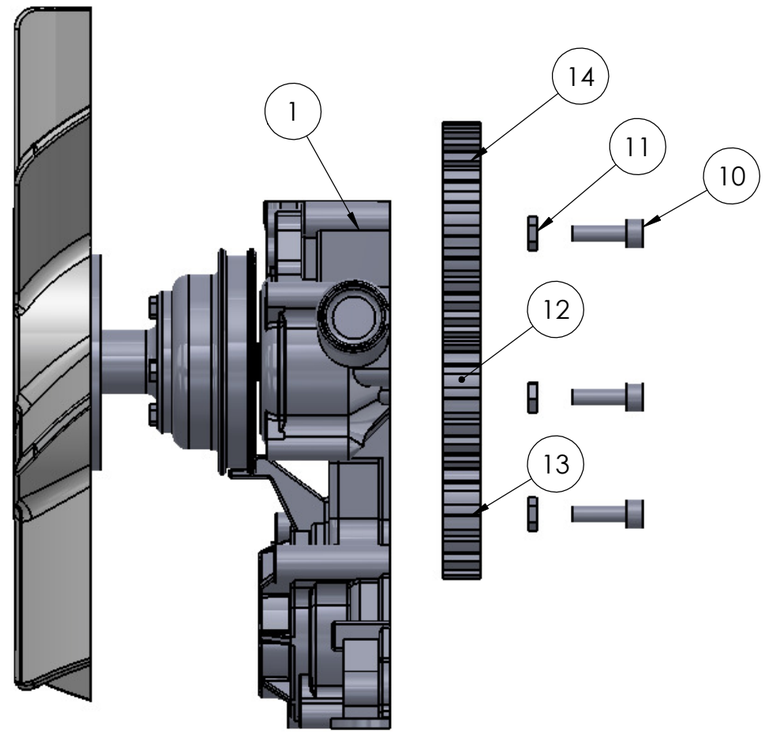

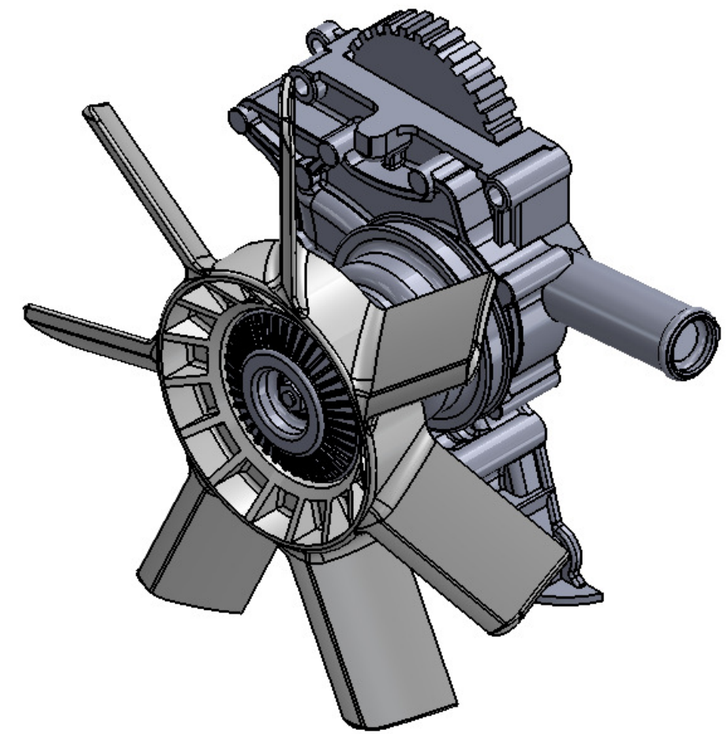

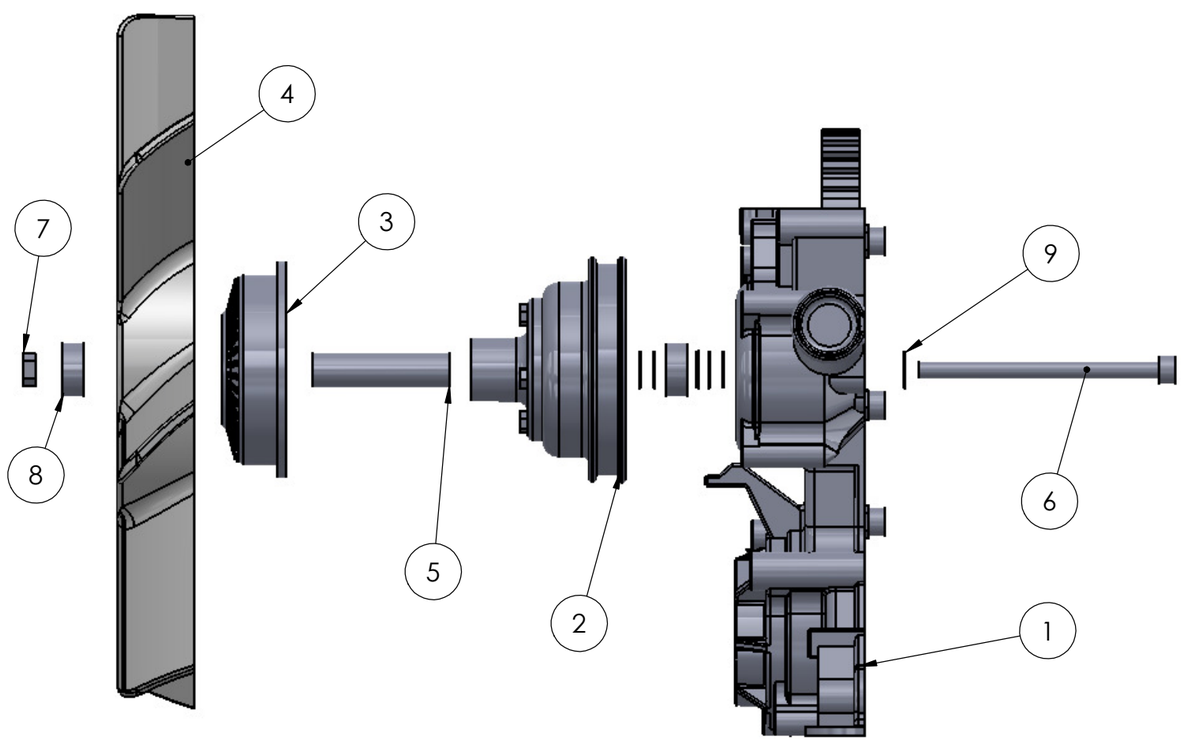

ITEM NO.	PART NUMBER	QTY.
1	timing cover	1
2	fan pulley	1
3	fan clutch	1
4	FAN	1
5	fanspacer	1
6	m3 45mm SHCS	1
7	m3 nut	1
8	623zz bearing	2
9	3mm washer	6
10	m3 10mm SHCS	3
11	m3 jam nut	3
12	gears_helical_16	1
13	gears_helical_16r	1
14	gears_helical_30x10r	1