ITEM NO.	PART NUMBER	QTY.
1	Q2 Riser LEDs front-left	1
2	Q2 Riser LEDs front-right	1
3	Q2 Riser LEDs back-right	1
4	Q2 Riser LEDs back-left	1
5	Q2 Riser LEDs & Tools clip	4
6	Q2 Riser LEDs & Tools clip lock	4
7	corner cover FLeft	2
8	corner cover FRight	2
9	middle cover	2
10	middle cover	2
11	Translucid window	6
12	inner window	6

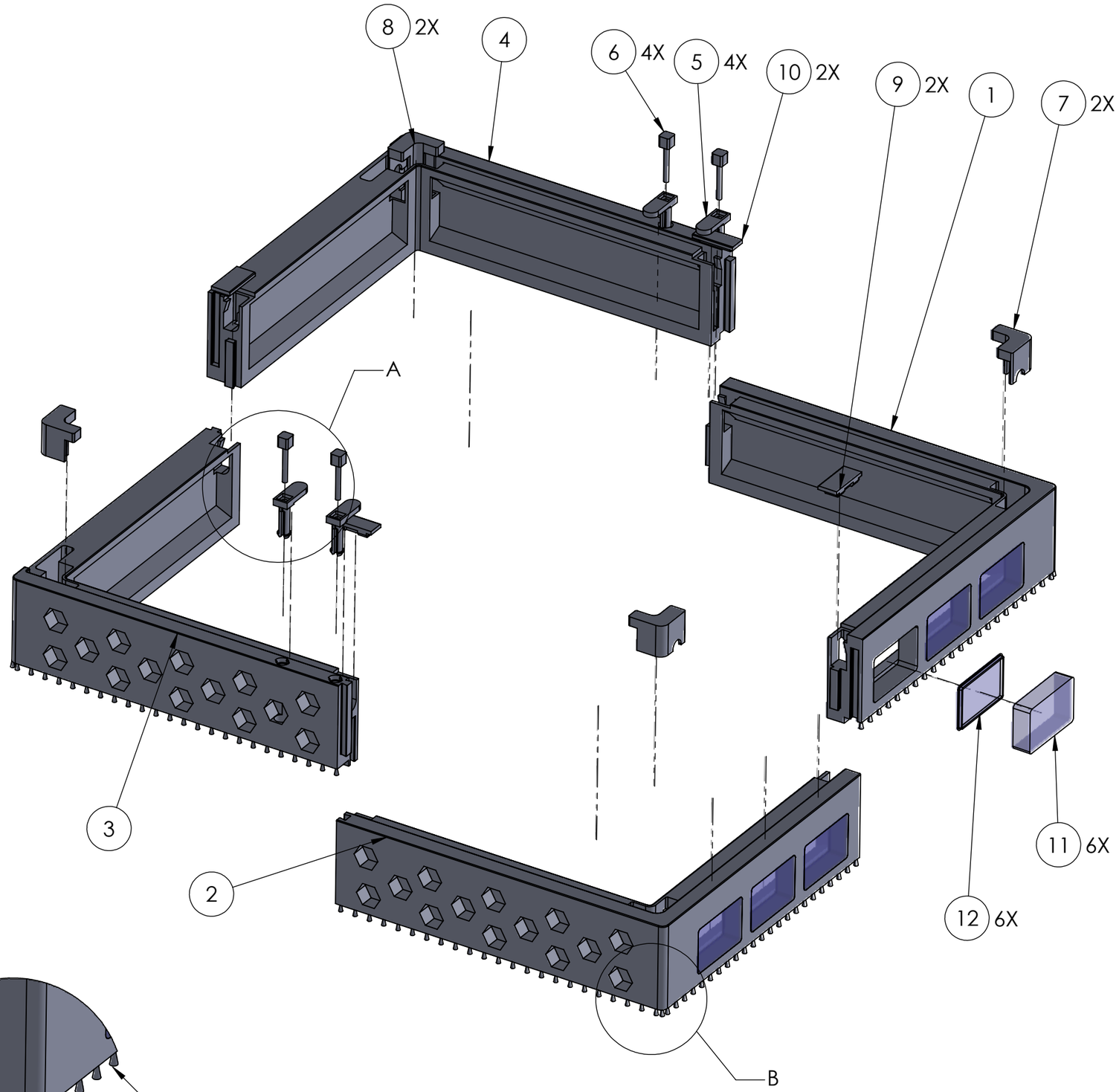

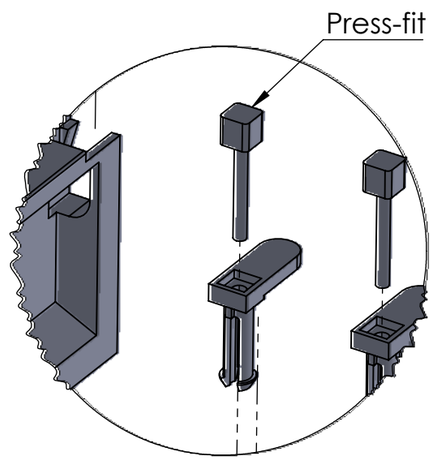

DETAIL A
SCALE 2 : 2.5

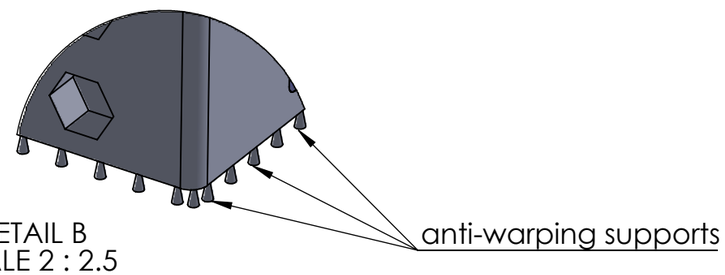

DETAIL B
SCALE 2 : 2.5